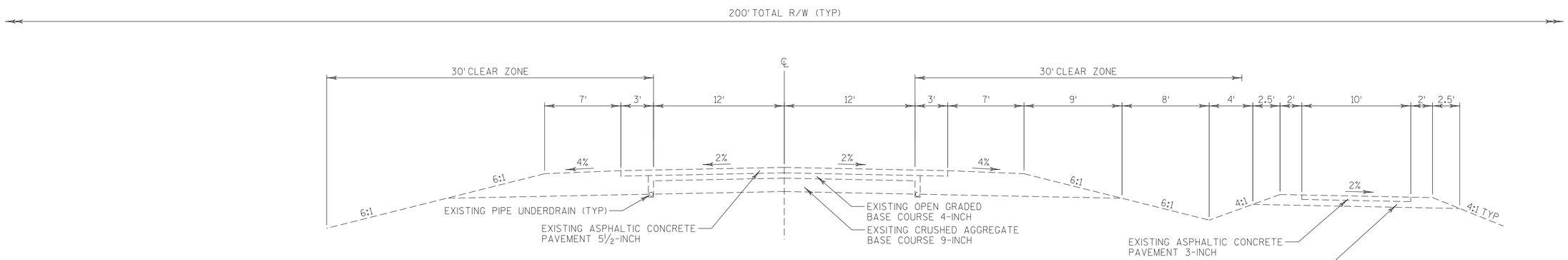

TYPICAL EXISTING SECTION

WAUKESHA BYPASS
STA 287+47 TO STA 289+75
STA 331+00 TO STA 336+00

PROJECT NO:	HWY: WAUKESHA BYPASS	COUNTY: WAUKESHA	TYPICAL EXISTING SECTION	SHEET	E